TAPE AND REEL INFORMATION

REEL DIMENSIONS

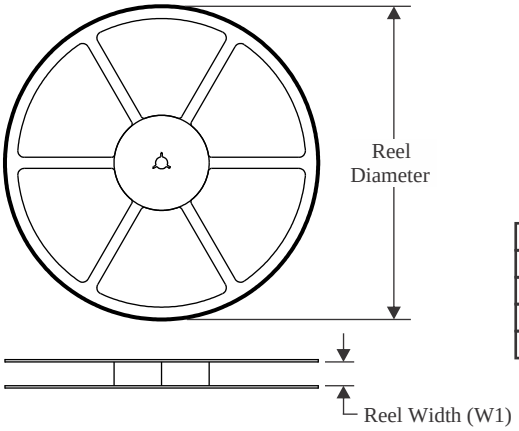

TAPE DIMENSIONS

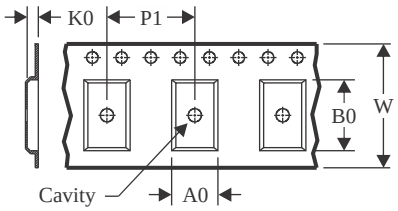

A0	Dimension designed to accommodate the component width
B0	Dimension designed to accommodate the component length
K0	Dimension designed to accommodate the component thickness
W	Overall width of the carrier tape
P1	Pitch between successive cavity centers

QUADRANT ASSIGNMENTS FOR PIN 1 ORIENTATION IN TAPE

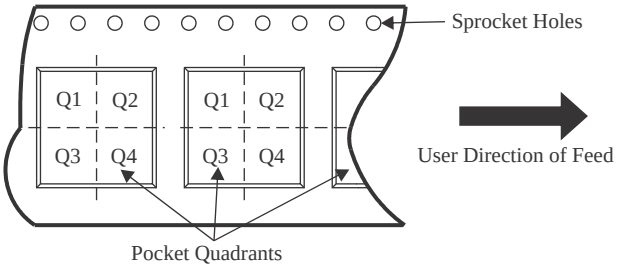

*All dimensions are nominal

Device	Package Type	Package Drawing	Pins	SPQ	Reel Diameter (mm)	Reel Width W1 (mm)	A0 (mm)	B0 (mm)	K0 (mm)	P1 (mm)	W (mm)	Pin1 Quadrant
5962R2120302PYE	HTSSOP	PWP	28	250	178.0	16.4	6.95	10.0	1.7	8.0	16.0	Q1
TPS7H1111MPWPTSEP	HTSSOP	PWP	28	250	178.0	16.4	6.95	10.0	1.7	8.0	16.0	Q1
TPS7H1111MPWPTSEP	HTSSOP	PWP	28	250	330.0	16.4	6.75	10.1	1.8	12.0	16.0	Q1

TAPE AND REEL BOX DIMENSIONS

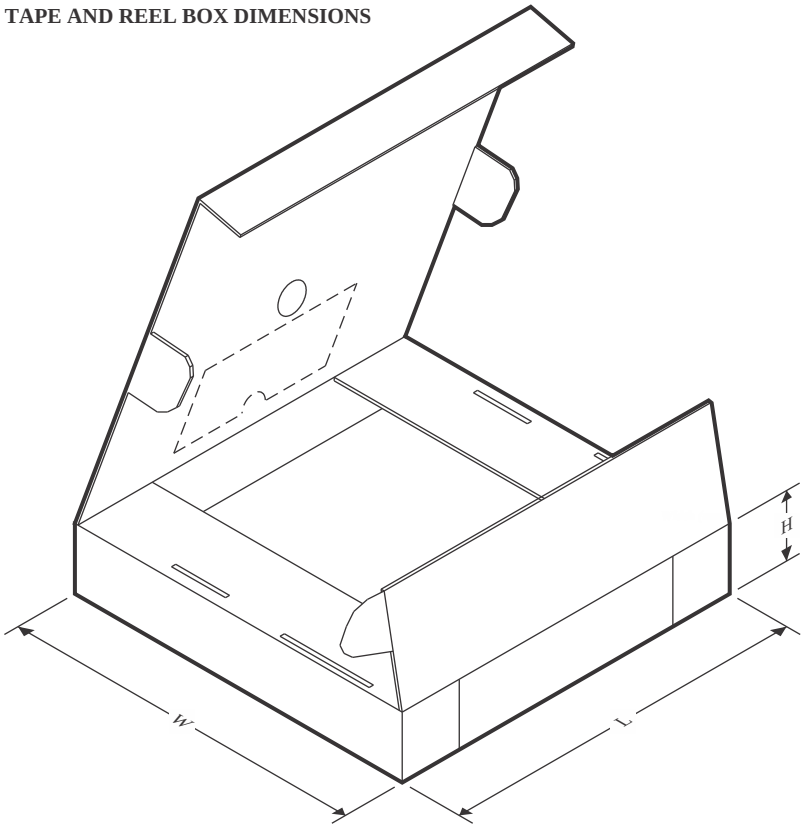

*All dimensions are nominal

Device	Package Type	Package Drawing	Pins	SPQ	Length (mm)	Width (mm)	Height (mm)
5962R2120302PYE	HTSSOP	PWP	28	250	210.0	185.0	35.0
TPS7H1111MPWPTSEP	HTSSOP	PWP	28	250	210.0	185.0	35.0
TPS7H1111MPWPTSEP	HTSSOP	PWP	28	250	356.0	356.0	35.0

TUBE

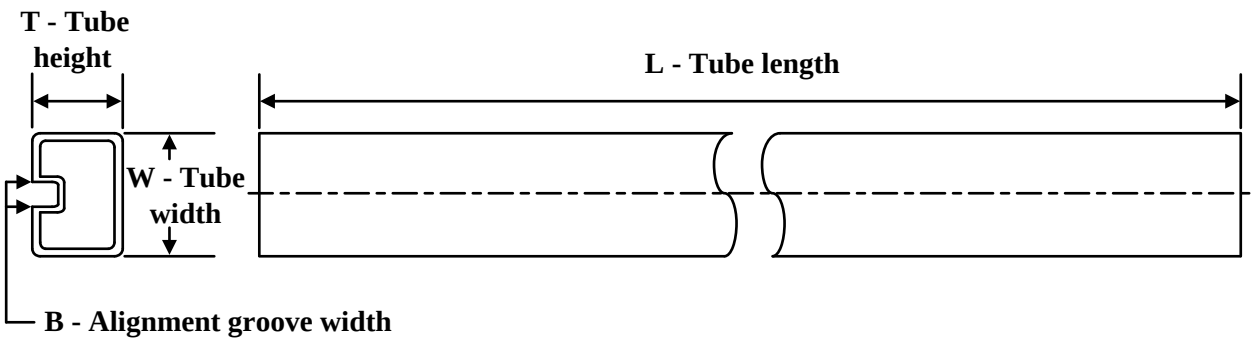

*All dimensions are nominal

Device	Package Name	Package Type	Pins	SPQ	L (mm)	W (mm)	T (µm)	B (mm)
5962R2120301VXC	HBL	CFP	14	25	506.98	26.16	6220	NA
TPS7H1111HBL/EM	HBL	CFP	14	25	506.98	26.16	6220	NA