TAPE AND REEL INFORMATION

REEL DIMENSIONS

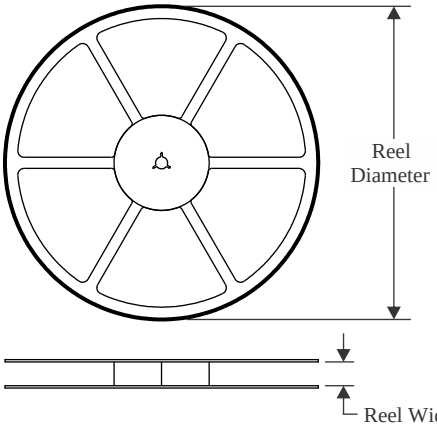

TAPE DIMENSIONS

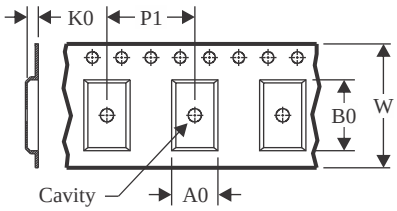

A0	Dimension designed to accommodate the component width
B0	Dimension designed to accommodate the component length
K0	Dimension designed to accommodate the component thickness
W	Overall width of the carrier tape
P1	Pitch between successive cavity centers

QUADRANT ASSIGNMENTS FOR PIN 1 ORIENTATION IN TAPE

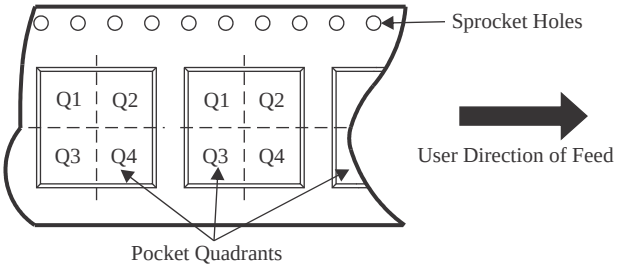

*All dimensions are nominal

Device	Package Type	Package Drawing	Pins	SPQ	Reel Diameter (mm)	Reel Width W1 (mm)	A0 (mm)	B0 (mm)	K0 (mm)	P1 (mm)	W (mm)	Pin1 Quadrant
SN74AHCT245DBR	SSOP	DB	20	2000	330.0	16.4	8.2	7.5	2.5	12.0	16.0	Q1
SN74AHCT245DGSR	VSSOP	DGS	20	5000	330.0	16.4	5.4	5.4	1.45	8.0	16.0	Q1
SN74AHCT245DGVR	TVSOP	DGV	20	2000	330.0	12.4	6.9	5.6	1.6	8.0	12.0	Q1
SN74AHCT245DWR	SOIC	DW	20	2000	330.0	24.4	10.9	13.3	2.7	12.0	24.0	Q1
SN74AHCT245NSR	SOP	NS	20	2000	330.0	24.4	8.4	13.0	2.5	12.0	24.0	Q1
SN74AHCT245PWR	TSSOP	PW	20	2000	330.0	16.4	6.95	7.0	1.4	8.0	16.0	Q1
SN74AHCT245PWRG3	TSSOP	PW	20	2000	330.0	16.4	6.95	7.1	1.6	8.0	16.0	Q1
SN74AHCT245PWRG4	TSSOP	PW	20	2000	330.0	16.4	6.95	7.0	1.4	8.0	16.0	Q1
SN74AHCT245PWRG4	TSSOP	PW	20	2000	330.0	16.4	6.95	7.0	1.4	8.0	16.0	Q1
SN74AHCT245RGYR	VQFN	RGY	20	3000	330.0	12.4	3.71	4.71	1.1	8.0	12.0	Q1
SN74AHCT245RKSR	VQFN	RKS	20	3000	180.0	12.4	2.8	4.8	1.2	4.0	12.0	Q1

TAPE AND REEL BOX DIMENSIONS

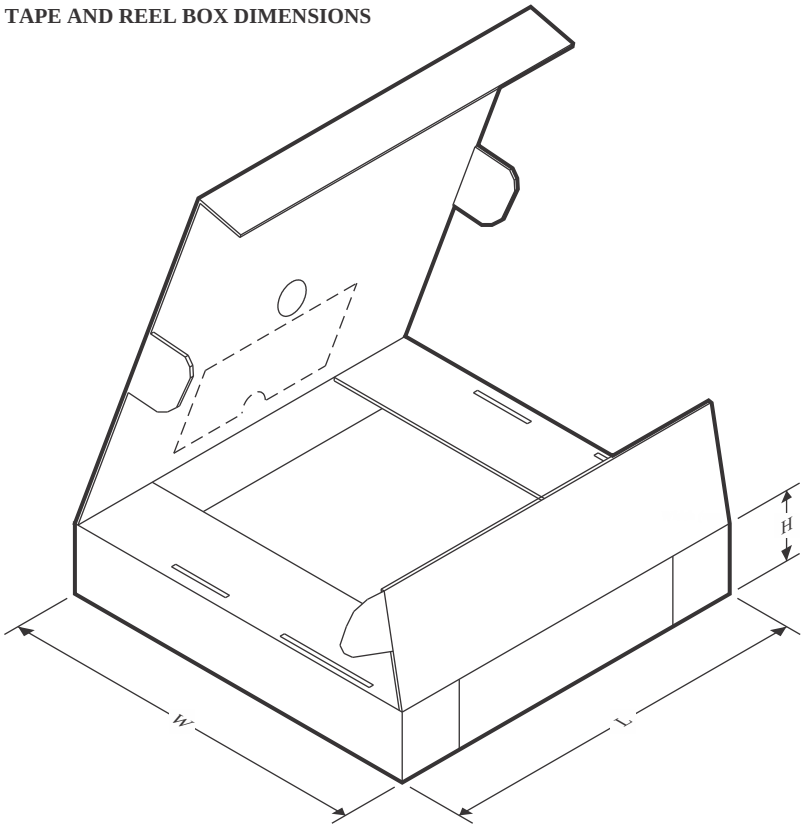

*All dimensions are nominal

Device	Package Type	Package Drawing	Pins	SPQ	Length (mm)	Width (mm)	Height (mm)
SN74AHCT245DBR	SSOP	DB	20	2000	353.0	353.0	32.0
SN74AHCT245DGSR	VSSOP	DGS	20	5000	353.0	353.0	32.0
SN74AHCT245DGVR	TVSOP	DGV	20	2000	353.0	353.0	32.0
SN74AHCT245DWR	SOIC	DW	20	2000	356.0	356.0	45.0
SN74AHCT245NSR	SOP	NS	20	2000	356.0	356.0	45.0
SN74AHCT245PWR	TSSOP	PW	20	2000	353.0	353.0	32.0
SN74AHCT245PWRG3	TSSOP	PW	20	2000	364.0	364.0	27.0
SN74AHCT245PWRG4	TSSOP	PW	20	2000	353.0	353.0	32.0
SN74AHCT245PWRG4	TSSOP	PW	20	2000	353.0	353.0	32.0
SN74AHCT245RGYR	VQFN	RGY	20	3000	353.0	353.0	32.0
SN74AHCT245RKSR	VQFN	RKS	20	3000	210.0	185.0	35.0

TUBE

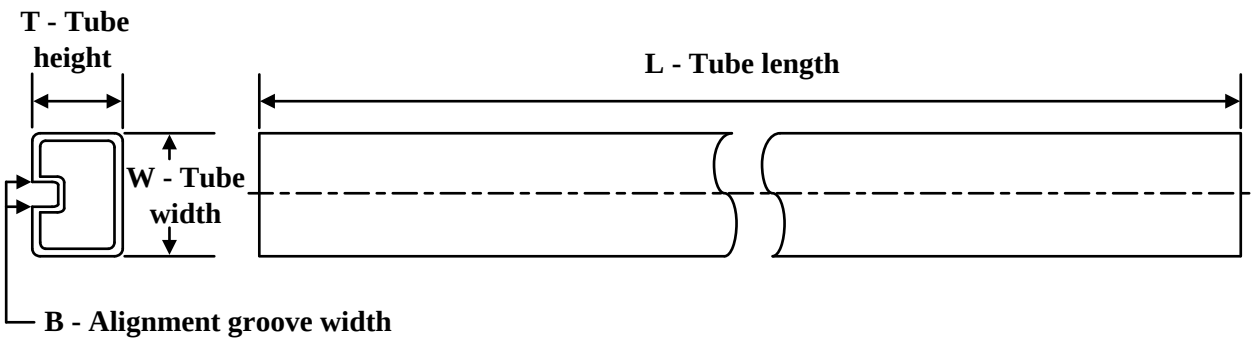

*All dimensions are nominal

Device	Package Name	Package Type	Pins	SPQ	L (mm)	W (mm)	T (µm)	B (mm)
5962-9681901Q2A	FK	LCCC	20	55	506.98	12.06	2030	NA
5962-9681901QSA	W	CFP	20	25	506.98	26.16	6220	NA
SN74AHCT245N	N	PDIP	20	20	506	13.97	11230	4.32
SN74AHCT245N.A	N	PDIP	20	20	506	13.97	11230	4.32
SNJ54AHCT245FK	FK	LCCC	20	55	506.98	12.06	2030	NA
SNJ54AHCT245FK.A	FK	LCCC	20	55	506.98	12.06	2030	NA
SNJ54AHCT245W	W	CFP	20	25	506.98	26.16	6220	NA
SNJ54AHCT245W.A	W	CFP	20	25	506.98	26.16	6220	NA