TAPE AND REEL INFORMATION

REEL DIMENSIONS

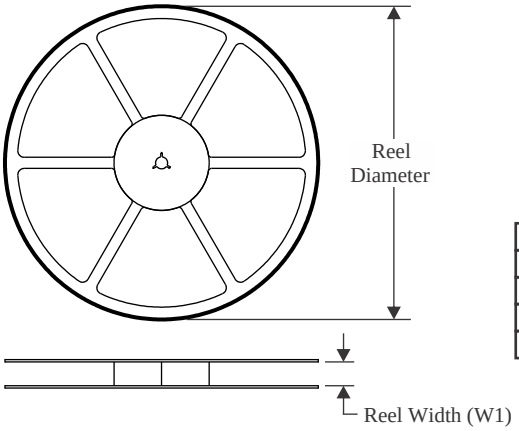

TAPE DIMENSIONS

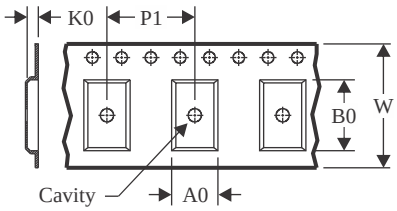

A0	Dimension designed to accommodate the component width
B0	Dimension designed to accommodate the component length
K0	Dimension designed to accommodate the component thickness
W	Overall width of the carrier tape
P1	Pitch between successive cavity centers

QUADRANT ASSIGNMENTS FOR PIN 1 ORIENTATION IN TAPE

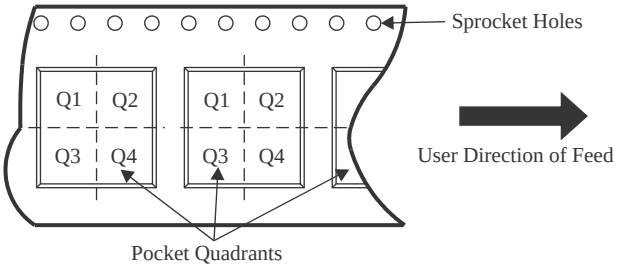

*All dimensions are nominal

Device	Package Type	Package Drawing	Pins	SPQ	Reel Diameter (mm)	Reel Width W1 (mm)	A0 (mm)	B0 (mm)	K0 (mm)	P1 (mm)	W (mm)	Pin1 Quadrant
SN75C1167DBR	SSOP	DB	16	2000	330.0	16.4	8.35	6.6	2.4	12.0	16.0	Q1
SN75C1168DBR	SSOP	DB	16	2000	330.0	16.4	8.35	6.6	2.4	12.0	16.0	Q1

TAPE AND REEL BOX DIMENSIONS

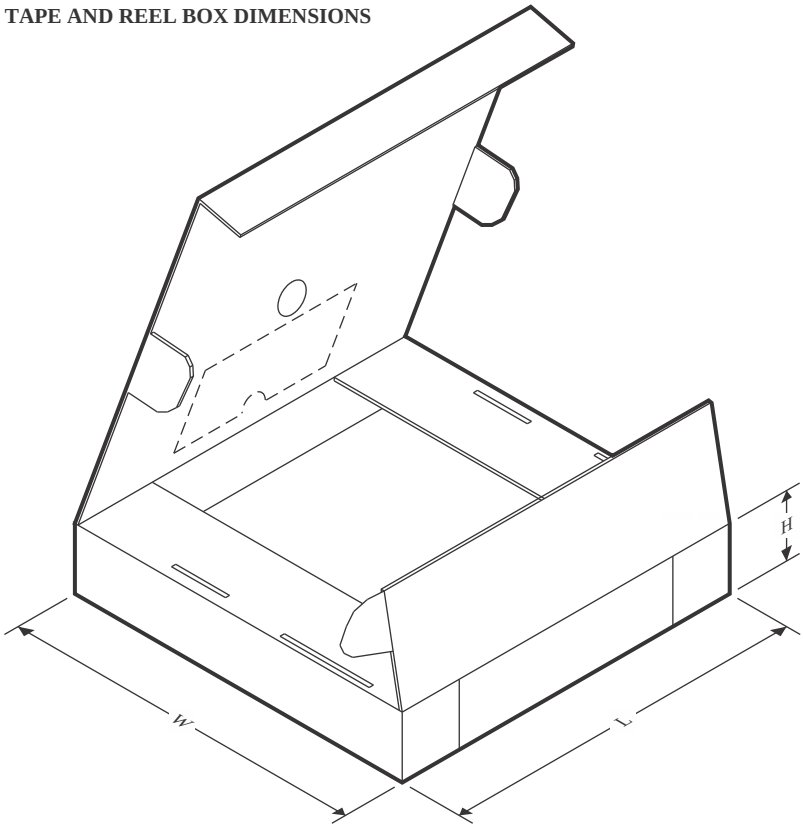

*All dimensions are nominal

Device	Package Type	Package Drawing	Pins	SPQ	Length (mm)	Width (mm)	Height (mm)
SN75C1167DBR	SSOP	DB	16	2000	353.0	353.0	32.0
SN75C1168DBR	SSOP	DB	16	2000	353.0	353.0	32.0

TUBE

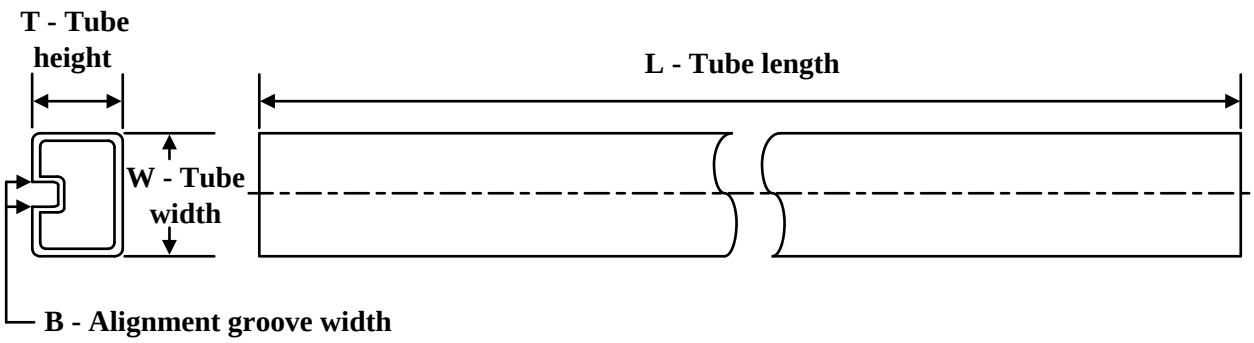

*All dimensions are nominal

Device	Package Name	Package Type	Pins	SPQ	L (mm)	W (mm)	T (µm)	B (mm)
SN65C1168N	N	PDIP	16	25	506	13.97	11230	4.32
SN65C1168N.A	N	PDIP	16	25	506	13.97	11230	4.32
SN75C1167N	N	PDIP	16	25	506	13.97	11230	4.32
SN75C1167N.A	N	PDIP	16	25	506	13.97	11230	4.32
SN75C1168N	N	PDIP	16	25	506	13.97	11230	4.32
SN75C1168N.A	N	PDIP	16	25	506	13.97	11230	4.32
SN75C1168NE4	N	PDIP	16	25	506	13.97	11230	4.32
SN75C1168NS	NS	SOP	16	50	530	10.5	4000	4.1
SN75C1168NS.A	NS	SOP	16	50	530	10.5	4000	4.1