TAPE AND REEL INFORMATION

REEL DIMENSIONS

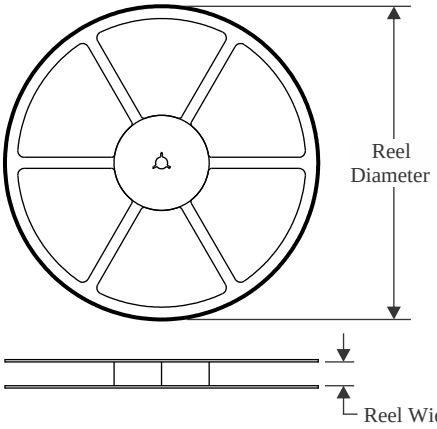

TAPE DIMENSIONS

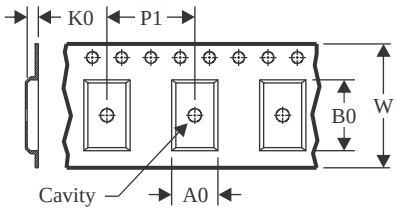

A0	Dimension designed to accommodate the component width
B0	Dimension designed to accommodate the component length
K0	Dimension designed to accommodate the component thickness
W	Overall width of the carrier tape
P1	Pitch between successive cavity centers

QUADRANT ASSIGNMENTS FOR PIN 1 ORIENTATION IN TAPE

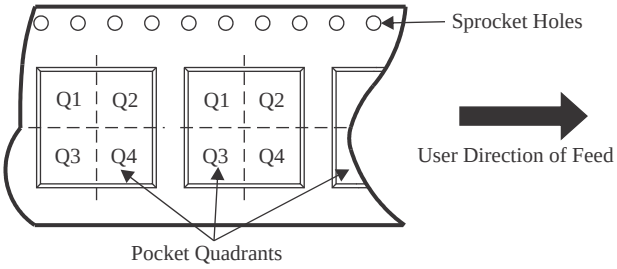

*All dimensions are nominal

Device	Package Type	Package Drawing	Pins	SPQ	Reel Diameter (mm)	Reel Width W1 (mm)	A0 (mm)	B0 (mm)	K0 (mm)	P1 (mm)	W (mm)	Pin1 Quadrant
BZX884C15VDPYRQ1	X1SON	DPY	2	10000	178.0	8.4	0.7	1.15	0.47	2.0	8.0	Q1
BZX884C16VDPYRQ1	X1SON	DPY	2	10000	178.0	8.4	0.7	1.15	0.47	2.0	8.0	Q1
BZX884C18VDPYRQ1	X1SON	DPY	2	10000	178.0	8.4	0.7	1.15	0.47	2.0	8.0	Q1
BZX884C27VDPYRQ1	X1SON	DPY	2	10000	178.0	8.4	0.7	1.15	0.47	2.0	8.0	Q1
BZX884C39VDPYRQ1	X1SON	DPY	2	10000	178.0	8.4	0.7	1.15	0.47	2.0	8.0	Q1
BZX884C5V6DPYRQ1	X1SON	DPY	2	10000	178.0	8.4	0.7	1.15	0.47	2.0	8.0	Q1
BZX884C6V8DPYRQ1	X1SON	DPY	2	10000	178.0	8.4	0.7	1.15	0.47	2.0	8.0	Q1
BZX884C8V2DPYRQ1	X1SON	DPY	2	10000	178.0	8.4	0.7	1.15	0.47	2.0	8.0	Q1
BZX884C9V1DPYRQ1	X1SON	DPY	2	10000	178.0	8.4	0.7	1.15	0.47	2.0	8.0	Q1

TAPE AND REEL BOX DIMENSIONS

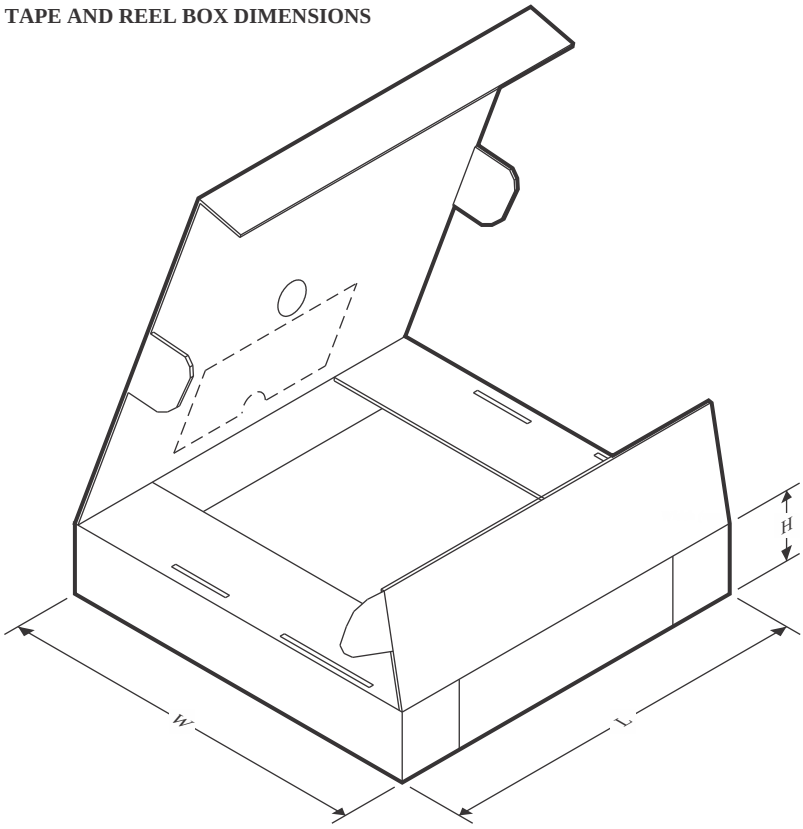

*All dimensions are nominal

Device	Package Type	Package Drawing	Pins	SPQ	Length (mm)	Width (mm)	Height (mm)
BZX884C15VDPYRQ1	X1SON	DPY	2	10000	205.0	200.0	33.0
BZX884C16VDPYRQ1	X1SON	DPY	2	10000	205.0	200.0	33.0
BZX884C18VDPYRQ1	X1SON	DPY	2	10000	205.0	200.0	33.0
BZX884C27VDPYRQ1	X1SON	DPY	2	10000	205.0	200.0	33.0
BZX884C39VDPYRQ1	X1SON	DPY	2	10000	205.0	200.0	33.0
BZX884C5V6DPYRQ1	X1SON	DPY	2	10000	205.0	200.0	33.0
BZX884C6V8DPYRQ1	X1SON	DPY	2	10000	205.0	200.0	33.0
BZX884C8V2DPYRQ1	X1SON	DPY	2	10000	205.0	200.0	33.0
BZX884C9V1DPYRQ1	X1SON	DPY	2	10000	205.0	200.0	33.0